ACO Product Catalogue

ACO Access Cover

UNIFACE

PAVING

SOLID

FIRE RESISTANCE

CONTENT

General Introduction		3
Product information UNIFACE	ACO Access Covers UNIFACE	4
	ACO Access Covers UNIFACE 2.0 GS	5
	ACO Access Covers UNIFACE DEEP 35	6
	ACO Access Covers UNIFACE DEEP 65	7
	ACO Access Covers UNIFACE ASSIST GS/SS	8
	ACO Access Covers UNIFACE MULTI GS/SS	8
	ACO Access Covers UNIFACE AL	9
	ACO Access Covers UNIFACE MULTI AL	10
	ACO Access Covers UNIFACE AL shallow	10
	ACO Access Covers UNIFACE SMART AL	11
Product information PAVING	ACO Access Covers PAVING	12
	ACO Access Covers PAVING GS 80	13
	ACO Access Covers PAVING GS 120	14
	ACO Access Covers PAVING ASSIST GS 80	15
	ACO Access Covers PAVING ASSIST GS 120	16
	ACO Access Covers PAVING AL	17
	ACO Access Covers PAVING MULTI	18
Product information SOLID	ACO Access Covers SOLID	20
	ACO Access Covers SOLID GS/SS	21
	ACO Access Covers SOLID ASSIST GS/SS	22
	ACO Access Covers SOLID AL	23
	ACO Access Covers SOLID MULTI GS/SS	24
LIFTER	ACO Access Covers LIFTER	25
Product information Fire Resistance	ACO Access Covers Fire Resistance	26
	ACO Access Covers UNIFACE GS/FR	27
	ACO Access Covers UNIFACE SS/FR	28
	ACO Access Covers UNIFACE AL/FR	29
	ACO Access Covers UNIFACE ASSIST GS/FR	30
	ACO Access Covers PAVING GS 80/FR	31
	ACO Access Covers PAVING GS 120/FR	32
	ACO Access Covers SOLID FR	33
Gas Spring Set		34
Screws and Caps		35
Certificates		36

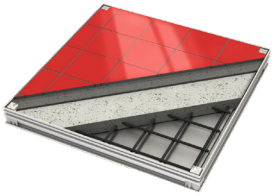

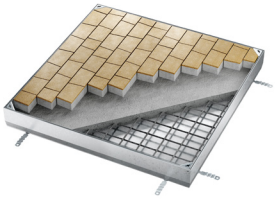

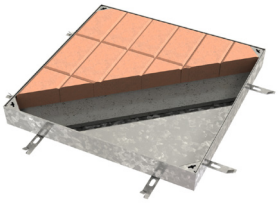

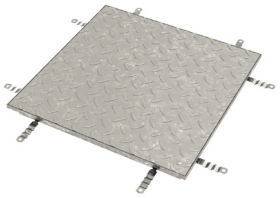

ACO Access Covers

We at ACO Industries have many years of experience in designing access covers. We use our broad technical knowledge in product design, testing, manufacturing and applications to deliver maximum quality to our customers. ACO Access Covers are innovative and made of high quality materials. Our complete range of covers is fully certified according to European standards and meets all load, safety and functional requirements.

The precise manufacture of stainless steel, galvanized steel, aluminium alloys and composites guarantees high reliability and long life of our products.

- Stainless steel is suitable for application in meat, beverage, chemical or food industry.
- Covers made of galvanized steel are typical for residential buildings, as well as for production and storage buildings.
- Aluminum covers for demanding applications such as in hotels and hospitals will complete the program.

ACO Access Covers can be flexibly installed into any interior or exterior areas. Their installation and handling, as well as their maintenance and cleaning, are easy.

A wide range of standard types with many options, tailor made production and the possibility of using various floor surfaces make an ACO Access Cover look like an inconspicuous chameleon smartly merging into its background while retaining its full functionality and safety.

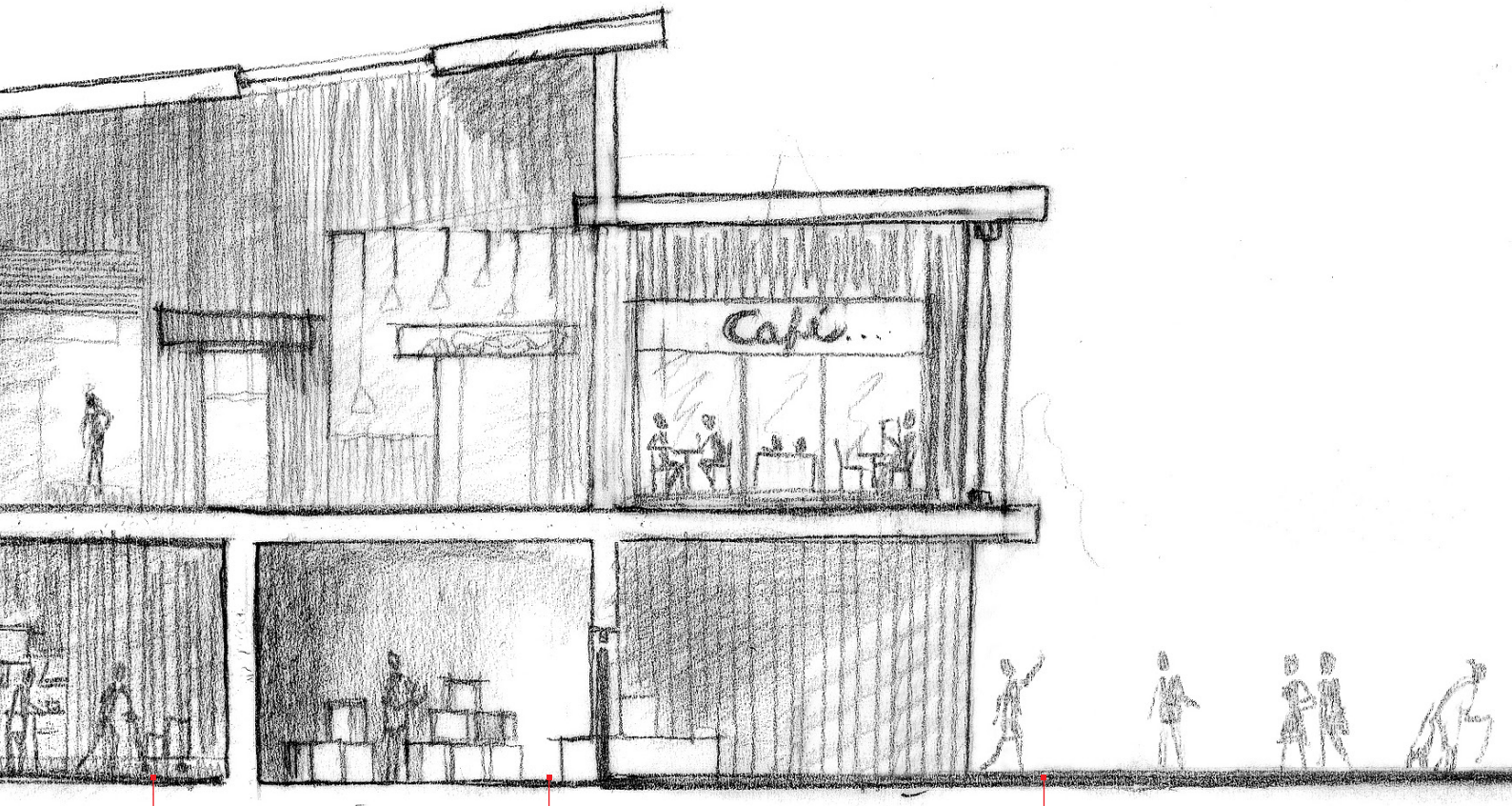

ACO Access Cover UNIFACE

ACO Access Cover SOLID

ACO Access Cover PAVING

COLLECT CLEAN HOLD REUSE

ACO WaterCycle
in action

ACO Access Cover UNIFACE

Product information

Typical applications are inside buildings or in building surroundings, where high level of design is required.

Recessed access covers are suitable for a thin floor surfaces in thickness up to 15 mm or in special product range thickenss up to 65mm.

The cover must be filled-up with concrete of required quality (C35/45) in order to achieve declared load capacity.

- Type tested and certified according to EN 1253-4, product range AAC Uniface DEEP according to EN124
- Tested with space for tiles height 15 mm and for pavement bricks and natural stone up to height 65 mm (competitors covers tested completely filled with concrete)
- Bolt locked – child safety
- Corrosion resistant
- Small corner parts
- Secure installation – good connection with concrete (profiled frame or anchors)
- Discreet product after installation
- Easy tool for opening and manipulation
- Watertightness declared based on product ranges listed below

ACO Access Cover UNIFACE 2.0 GS/SS

Product information

- Meets declared load class up to N250 for all clear openings up to 1 m
- Hot dip galvanized mild steel (≥ 60 µm of zinc) or pickle passivated stainless steel
- Preciseness, design
- Thanks to unique bending on the top no additional stripes for installation necessary
- Easy opening after installation
- Less friction between frame and cover
- No sharp edges – improved safety

- Rolled profiles for galvanized version of the cover are made from innovative material UltraSTEEL®. It helps significantly reduce weight of the cover while maintaining the strength, stability and stiffness of the product.
- Rolled profiles for stainless steel version are made from conventional steel sheet in thickness 2 mm.
- Watertightness certified acc. to EN 1253-4. *

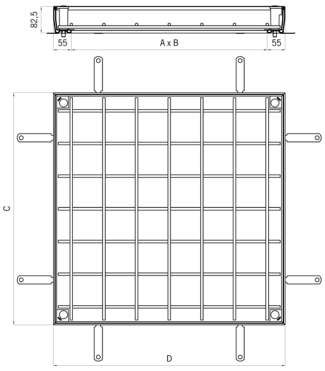

UltraSTEEL® - More information at www.hadleygroup.com

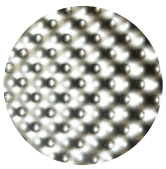

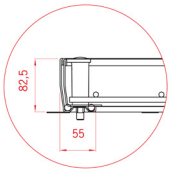

* Watertightness test procedure acc. to EN 1253-4: water flooding 10±1 mm for time period 15±1m – no leak of water to the bottom side of cover supervised by Authorized body 204.

GS - hot dip galvanized mild steel (1.0037)
SS - pickle passivated stainless steel (1.4301)

Order information

Clear opening (A x B) [mm]	External dimensions (C x D) [mm]	Frame height [mm]	Cover depth [mm]	Space for final floor [mm]	Load class (EN 1253)	Weight [kg]	Part No. GS (1.0037)	Part No. SS (1.4301)
300 x 300	410 x 410	82,5	70	15	N250	9,26	415858	415887
400 x 400	510 x 510	82,5	70	15	N250	11,89	415859	415888
400 x 600	510 x 710	82,5	70	15	N250	14,65	415860	415889
450 x 450	560 x 560	82,5	70	15	M125	13,55	415861	415890
500 x 500	610 x 610	82,5	70	15	M125	14,79	415862	415891
600 x 600	710 x 710	82,5	70	15	M125	18,05	415863	415892
600 x 800	710 x 910	82,5	70	15	M125	23,66	415864	415893
600 x 1000	710 x 1110	82,5	70	15	M125	27,56	415865	415894
600 x 1200	710 x 1310	82,5	70	15	M125	31,47	415866	415895
635 x 635	745 x 745	82,5	70	15	L15	21,5	415867	415896
700 x 700	810 x 810	82,5	70	15	L15	23,84	415868	415897
800 x 800	910 x 910	82,5	70	15	L15	28,4	415869	415898
800 x 1000	910 x 1110	82,5	70	15	L15	33,09	415870	415899
1000 x 1000	1110 x 1110	82,5	70	15	L15	38,58	415871	415900
450 x 450	560 x 560	82,5	110	15	N250	13,71	415872	415901
500 x 500	610 x 610	82,5	110	15	N250	14,96	415873	415902
600 x 600	710 x 710	82,5	110	15	N250	18,31	415874	415903
600 x 800	710 x 910	82,5	110	15	N250	24,31	415875	415904
600 x 1000	710 x 1110	82,5	110	15	N250	28,81	415876	415905
635 x 635	745 x 745	82,5	110	15	M125	21,34	415877	415906
700 x 700	810 x 810	82,5	110	15	M125	24,33	415878	415907
800 x 800	910 x 910	82,5	110	15	M125	29,06	415879	415908
800 x 1000	910 x 1110	82,5	110	15	M125	30,9	415880	415909
1000 x 1000	1110 x 1110	82,5	110	15	M125	39,57	415881	415910
635 x 635	745 x 745	82,5	140	15	N250	22,35	415882	415911
700 x 700	810 x 810	82,5	140	15	N250	25,26	415883	415912
800 x 800	910 x 910	82,5	140	15	N250	30,06	415884	415913
800 x 1000	910 x 1110	82,5	140	15	N250	26,98	415885	415914
1000 x 1000	1110 x 1110	82,5	140	15	N250	40,62	415886	415915

ACO Access Cover UNIFACE DEEP 35

Product information

- Meets declared load class up to B125 for all clear opening up to 1 m dimensions
- Deeper cover allows infill of tiles, paving blocks, or natural stones up to thickness of 35 mm (adheasive included)
- No risk – load class capacity guaranteed and certified
- Secured in the frame by its own weight
- Trouble-free removal and assembly

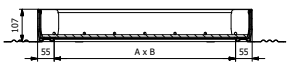

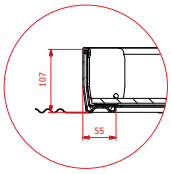

- Corrosion resistant - Hot dip galvanized mild steel (≥ 60 µm of zinc) or pickle passivated stainless stee
- Preciseness design
- Less friction between frame and cover
- No sharp edges – improved safety
- Rolled profiles for galvanized version of the cover are made from innovative material UltraSTEEL®. It helps significantly reduce weight of the cover while maintaining the strength, stability and stiffness of the product
- Rolled profiles for stainless steel version are made from conventional steel sheet in thickness 2 mm
- Covers are equipped with sealing (no watertightness declaration)

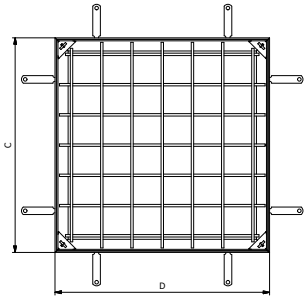

NEW **Order information**

Clear opening (A x B) [mm]	External dimensions (C x D) [mm]	Frame height [mm]	Cover depth [mm]	Space for final floor [mm]	Load class (EN 124)	Weight [kg]	Part No. GS (1.0037)	Part No. SS (1.4301)
300 x 300	410 x 410	107	95	up to 35	B125	11,5	445846	445847
400 x 400	510 x 510	107	95	up to 35	B125	14,9	445850	445851
500 x 500	610 x 610	107	95	up to 35	B125	18,8	445854	445855
600 x 600	710 x 710	107	95	up to 35	B125	22,9	445858	445859
700 x 700	810 x 810	107	95	up to 35	B125	29,4	445862	445863
800 x 800	910 x 910	107	95	up to 35	B125	34,7	445866	445867
900 x 900	1010 x 1010	107	95	up to 35	B125	40,5	445870	445871
1000 x1000	1110 x 1110	107	95	up to 35	B125	46,6	445874	445875
600 x 1000	710 x 1110	107	95	up to 35	B125	33,9	445878	445879
800 x 1000	910 x 1110	107	95	up to 35	B125	40,3	445882	445883

ACO Access Cover UNIFACE DEEP 65

Product information

- Meets declared load class up to B125 for all clear opening up to 1 m dimensions
- Deeper cover allows infill of tiles, paving blocks, or natural stones up to thickness of 65 mm (adheasive included)
- No risk – load class capacity guaranteed and certified
- Secured in the frame by its own weight
- Trouble-free removal and assembly

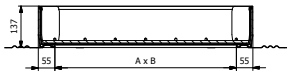

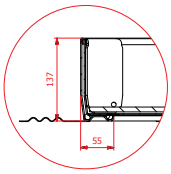

- Corrosion resistant - Hot dip galvanized mild steel (≥ 60 µm of zinc) or pickle passivated stainless stee
- Preciseness design
- Less friction between frame and cover
- No sharp edges – improved safety
- Rolled profiles for galvanized version of the cover are made from innovative material UltraSTEEL®. It helps significantly reduce weight of the cover while maintaining the strength, stability and stiffness of the product
- Rolled profiles for stainless steel version are made from conventional steel sheet in thickness 2 mm
- Covers are equipped with sealing (no watertightness declaration)

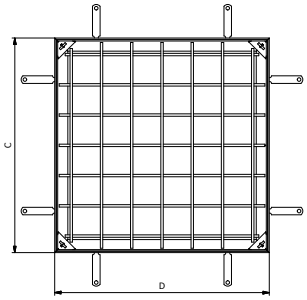

NEW

Order information

Clear opening (A x B) [mm]	External dimensions (C x D) [mm]	Frame height [mm]	Cover depth [mm]	Space for final floor [mm]	Load class (EN 124)	Weight [kg]	Part No. GS (1.0037)	Part No. SS (1.4301)
300 x 300	410 x 410	137	125	up to 65	B125	13,31	445886	445887
400 x 400	510 x 510	137	125	up to 65	B125	17,16	445890	445891
500 x 500	610 x 610	137	125	up to 65	B125	21,32	445894	445895
600 x 600	710 x 710	137	125	up to 65	B125	25,8	445898	445899
700 x 700	810 x 810	137	125	up to 65	B125	32,69	445902	445903
800 x 800	910 x 910	137	125	up to 65	B125	38,43	445906	445907
900 x 900	1010 x 1010	137	125	up to 65	B125	44,56	445910	445911
1000 x1000	1110 x 1110	137	125	up to 65	B125	51,1	445914	445915
600 x 1000	710 x 1110	137	125	up to 65	B125	37,63	445918	445919
800 x 1000	910 x 1110	137	125	up to 65	B125	44,36	445922	445923

ACO Access Cover UNIFACE ASSIST GS/SS

Product information

- Option with opening assistance
- One man operation, hinges, gas springs (installed afterwards from safety reasons)
- Locked by two bolts
- Highest grade of stainless steel (1.4571) available on request
- Watertightness tested (not certified) acc. to EN 1253-4 *

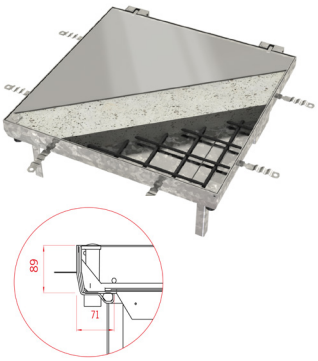

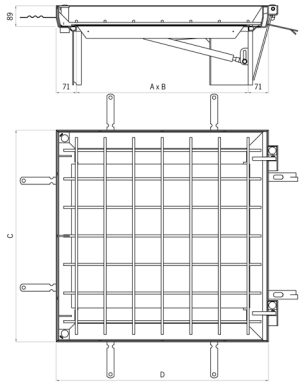

* Watertightness test procedure acc. to EN 1253-4: water flooding 10±1 mm for time period 15±1m – no leak of water to the bottom side of cover supervised by Authorized body 204.

Order information

Clear opening (A x B) [mm]	External dimensions (C x D) [mm]	Frame height [mm]	Cover depth [mm]	Space for final floor [mm]	Load class (EN 1253)	Weight [kg]	Part No. GS (1.0037)	Part No. SS (1.4301)
400 x 400	575 x 542	89	70	15	N250	26,5	406537	406529
500 x 500	675 x 642	89	70	15	M125	31,5	406538	406530
600 x 600	775 x 742	89	70	15	M125	38	406539	406531
600 x 800	775 x 942	89	70	15	M125	44,5	408713	408712
800 x 800	975 x 942	89	70	15	L15	54,5	406540	406532
800 x 1000	975 x 1142	89	70	15	L15	58,4	414951	414950
1000 x 1000	1175 x 1142	89	70	15	L15	68	406541	406533
500 x 500	675 x 642	89	110	15	N250	31,5	406542	406534
600 x 600	775 x 742	89	110	15	N250	38	406543	406535
800 x 800	975 x 942	89	110	15	M125	54	406544	406536
750 x 750	927 x 892	89	70	15	L15	52	445754	445755
450 x 450	627 x 592	89	70	15	M125	30,3	445684	445685
450 x 600	627 x 742	89	70	15	M125	34,2	445686	445687
600 x 750	777 x 892	89	70	15	M125	44	445688	445689
600 x 900	777 x 1042	89	70	15	M125	48,3	445690	445691
900 x 900	1077 x 1042	89	110	15	M125	61,6	445692	445693
600 x 1000	777 x 1142	89	70	15	M125	54	445694	445695

ACO Access Cover UNIFACE MULTI GS/SS

Product information

- Option for oversize multipart solutions
- Removable support beams make it possible to use the whole clear opening of the cover
- Trouble-free removal and assembly
- Individually designed
- Covers are not watertight

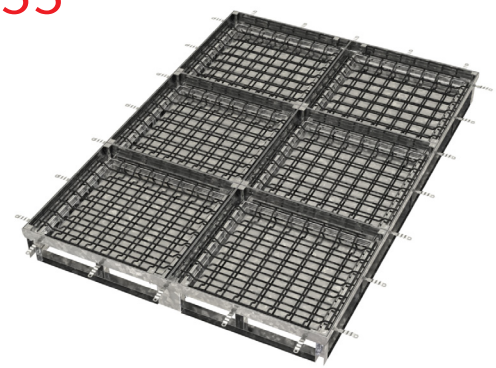

ACO Access Cover UNIFACE AL

Product information

- Excellent optic aesthetics
- Meets declared load class up to M125
- Corrosion resistant aluminium alloy
- Precision thanks to crimping (mechanical fixing)
- Watertightness certified acc. to EN 1253-4 *
- Easy opening – prevents blockage
- Easy installation – positioning of the cover in frame
- Tiny tolerances, perfect fit
- Very small corner parts (30×30 mm)
- Brass nut to prevent blockage
- Reinforcement in optimal position

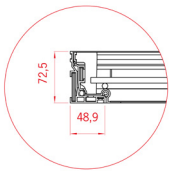

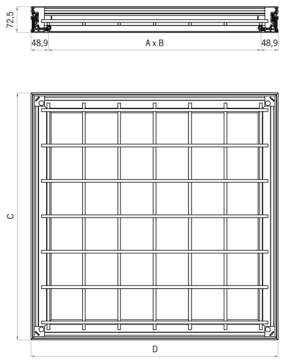

* Watertightness test procedure acc. to EN 1253-4: water flooding 10±1 mm for time period 15±1m – no leak of water to the bottom side of cover supervised by Authorized body 204.

Order information

Clear opening (A x B) [mm]	External dimensions (C x D) [mm]	Frame height [mm]	Cover depth [mm]	Space for final floor [mm]	Load class (EN 1253)	Weight [kg]	Part No. AL
200 x 200	298 x 298	72,5	70	0 / 15	M125 / M125	3,92	406881
300 x 300	398 x 398	72,5	70	0 / 15	M125 / 100 kN	5,75	405340
400 x 400	498 x 498	72,5	70	0 / 15	M125 / 100 kN	7,07	405341
400 x 600	498 x 698	72,5	70	0 / 15	M125 / 100 kN	8,73	405344
450 x 450	548 x 548	72,5	70	0 / 15	M125 / 50 kN	7,98	405342
450 x 600	548 x 698	72,5	70	0 / 15	M125 / 50 kN	9,22	406622
500 x 500	598 x 598	72,5	70	0 / 15	M125 / 50 kN	9,57	405343
600 x 600	698 x 698	72,5	70	0 / 15	M125 / 50 kN	11,43	405345
600 x 750	698 x 848	72,5	70	0 / 15	M125 / 50 kN	12,6	406623
600 x 800	698 x 898	72,5	70	0 / 15	M125 / 50 kN	12,97	405346
600 x 900	698 x 998	72,5	70	0 / 15	M125 / 50 kN	14,88	406626
600 x 1000	698 x 1098	72,5	70	0 / 15	M125 / 50 kN	15,86	405826
600 x 1200	698 x 1298	72,5	70	0 / 15	M125 / 50 kN	18,43	414953
635 x 635	733 x 733	72,5	70	0 / 15	100 kN / L15	12,06	414952
675 x 675	773 x 773	72,5	70	0 / 15	100 kN / L15	12,6	406624
700 x 700	798 x 798	72,5	70	0 / 15	100 kN / L15	13,08	405347
750 x 750	848 x 848	72,5	70	0 / 15	100 kN / L15	14,11	406625
800 x 800	898 x 898	72,5	70	0 / 15	100 kN / L15	16,14	405348
800 x 1000	898 x 1098	72,5	70	0 / 15	100 kN / L15	19,59	405349
900 x 900	998 x 998	72,5	70	0 / 15	50 kN / L15	19,87	406627
1000 x 1000	1098 x 1098	72,5	70	0 / 15	50 kN / L15	22,9	405350

ACO Access Cover UNIFACE MULTI AL

Product information

- Option for oversize multipart solutions
- Removable support beams make it possible to use the whole clear opening of the cover
- Trouble-free removal and assembly
- Maximum clear width 1000mm
- Maximum load class L15
- Individually designed
- Covers are not watertight

ACO Access Cover UNIFACE AL shallow

Product information

- For an application in floor screed (50 mm)
- No impact on structure slab
- Weight of installed cover reduced to 2/3 compare to standard AL cover
- Load capacity L15 for cover fully filled with concrete
- Load capacity K3 for cover with tiles in thickness up to 15 mm
- Covers are equipped with sealing (no watertightness declaration)

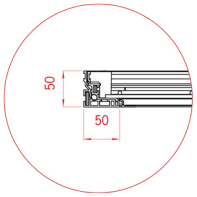

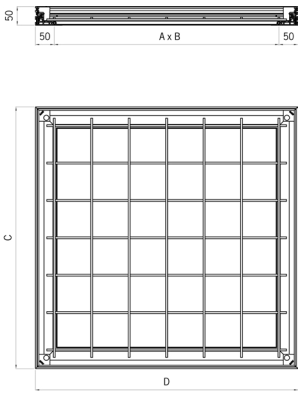

Order information

Clear opening (A x B) [mm]	External dimensions (C x D) [mm]	Frame height [mm]	Cover depth [mm]	Space for final floor [mm]	Load class (EN 1253)	Weight [kg]	Part No. AL
200 x 200	300 x 300	50	46,5	0 / 15	L15 / K3	2,9	415140
300 x 300	400 x 400	50	46,5	0 / 15	L15 / K3	4,21	415141
400 x 400	500 x 500	50	46,5	0 / 15	L15 / K3	5,39	415142
400 x 600	500 x 700	50	46,5	0 / 15	L15 / K3	6,59	415145
450 x 450	550 x 550	50	46,5	0 / 15	L15 / K3	5,84	415143
450 x 600	550 x 700	50	46,5	0 / 15	L15 / K3	6,9	445696
500 x 500	600 x 600	50	46,5	0 / 15	L15 / K3	6,86	415144
600 x 600	700 x 700	50	46,5	0 / 15	L15 / K3	8,41	415146
600 x 750	700 x 850	50	46,5	0 / 15	L15 / K3	9.3	445697
600 x 800	700 x 900	50	46,5	0 / 15	L15 / K3	9,63	415149
600 x 900	700 x 1000	50	46,5	0 / 15	L15 / K3	10,65	415151
600 x 1000	700 x 1100	50	46,5	0 / 15	L15 / K3	11,4	415153
600 x 1200	700 x 1300	50	46,5	0 / 15	L15 / K3	12,77	415156
635 x 635	735 x 735	50	46,5	0 / 15	L15 / K3	10,8	415147
700 x 700	800 x 800	50	46,5	0 / 15	L15 / K3	11,82	415148
750 x 750	850 x 850	50	46,5	0 / 15	L15 / K3	12.7	445698
800 x 800	900 x 900	50	46,5	0 / 15	L15 / K3	15,13	415150
800 x 1000	900 x 1100	50	46,5	0 / 15	L15 / K3	18,02	415154
900 x 900	1000 x 1000	50	46,5	0 / 15	L15 / K3	17,94	415152
1000 x 1000	1100 x 1100	50	46,5	0 / 15	L15 / K3	20,97	415155

ACO Access Cover UNIFACE SMART AL

Product information

- Lightweight cover with structural composite infill (no concrete necessary)
- Load capacity L15 with tiles in thickness up to 15 mm
- Weight of installed cover reduced to 1/2 compare to shallow AL cover
- Easy manipulation
- One man operation
- Secure and time saving installation
- No risk – load capacity always guaranteed
- Covers are equipped with sealing (no watertightness declaration)

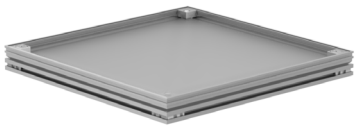

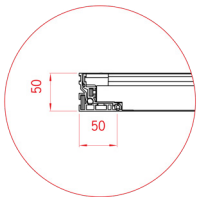

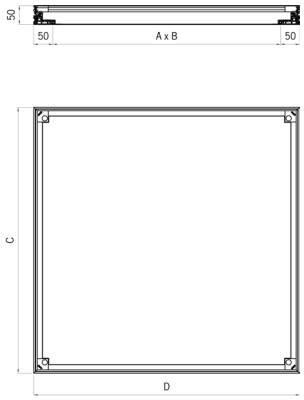

Order information

Clear opening (A x B) [mm]	External dimensions (C x D) [mm]	Frame height [mm]	Cover depth [mm]	Space for final floor [mm]	Load class (EN 1253)	Weight [kg]	Part No. AL
200 x 200	300 x 300	50	-	15	L15	3,7	415157
300 x 300	400 x 400	50	-	15	L15	5,68	415158
400 x 400	500 x 500	50	-	15	L15	7,77	415159
450 x 450	550 x 550	50	-	15	L15	9,23	445699
500 x 500	600 x 600	50	-	15	L15	10,27	415160
600 x 450	550 x 700	50	-	15	L15	11,6	445700
600 x 600	700 x 700	50	-	15	L15	13,16	415161

ACO Access Cover PAVING

Product information

Typically specified for use outside buildings, for pedestrian areas, driveways and car parks. Recessed access covers for a pavement, natural stone or bitumen infill in height up to 120 mm.

- Strong supports are welded underneath of the cover
- Load capacity up to load class C250 for all clear openings up to 1 m
- No concrete or any other additional structural infill necessary
- Equipped with a seal
- Watertightness declared based on product ranges listed below

ACO Access Cover PAVING GS 80

Product information

- Type tested and certified according to EN 124
- Equipped with a seal
- Corrosion resistant – hot dip galvanized mild steel
- Secure and time saving installation
- No risk – load capacity always guaranteed
- 80 tray depth available
- Watertightness tested (not certified) acc. to EN 1253-4 *

- Secured in the frame by its own weight - child safety
- Stainless steel version available on request (1.4301 or 1.4571)

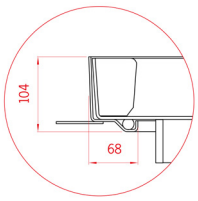

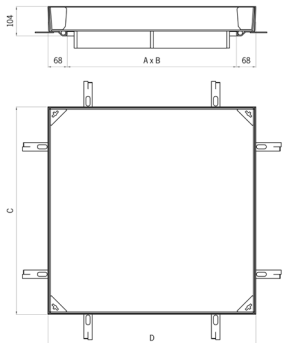

* Watertightness test procedure acc. to EN 1253-4: water flooding 10±1 mm for time period 15±1m – no leak of water to the bottom side of cover supervised by Authorized body 204.

Order information

Clear opening (A x B) [mm]	External dimensions (C x D) [mm]	Frame height [mm]	Cover depth [mm]	Load class (EN 124)	Weight [kg]	Part No. GS (1.0037)
300 x 300	436 x 436	104	80	A15	16,4	407102
400 x 400	536 x 536	104	80	A15	21,6	407103
400 x 600	536 x 736	104	80	A15	26,9	409858
500 x 500	636 x 636	104	80	A15	27,4	407104
600 x 600	736 x 736	104	80	A15	33,4	407105
600 x 1000	736 x 1136	104	80	A15	47,85	409859
700 x 700	836 x 836	104	80	A15	42,2	409984
800 x 800	936 x 936	104	80	A15	49,45	409985
900 x 900	1036 x 1036	104	80	A15	57,3	409986
1000 x 1000	1136 x 1136	104	80	A15	65,55	409987
300 x 300	436 x 436	104	80	B125	22	406569
400 x 400	536 x 536	104	80	B125	30,9	406570
400 x 600	536 x 736	104	80	B125	37,9	409860
500 x 500	636 x 636	104	80	B125	38,25	406571
600 x 600	736 x 736	104	80	B125	45,9	406572
600 x 1000	736 x 1136	104	80	B125	73,8	409861
700 x 700	836 x 836	104	80	B125	65,6	406573
800 x 800	936 x 936	104	80	B125	75,15	406574
900 x 900	1036 x 1036	104	80	B125	85,3	406575
1000 x 1000	1136 x 1136	104	80	B125	96,15	406576
300 x 300	436 x 436	104	80	C250	28,1	406577
400 x 400	536 x 536	104	80	C250	45,7	406578
400 x 600	536 x 736	104	80	C250	57,6	409862
500 x 500	636 x 636	104	80	C250	60,2	406579
600 x 600	736 x 736	104	80	C250	71,3	406580
600 x 1000	736 x 1136	104	80	C250	105,1	409863
700 x 700	836 x 836	104	80	C250	93,5	406581
800 x 800	936 x 936	104	80	C250	106,8	406582
900 x 900	1036 x 1036	104	80	C250	121	406583
1000 x 1000	1136 x 1136	104	80	C250	135,9	406584
400 x 400	536 x 536	104	80	D400	44,31	445638
500 x 500	636 x 636	104	80	D400	61,82	445639
600 x 600	736 x 736	104	80	D400	81,84	445640
700 x 700	836 x 836	104	80	D400	101,47	445641
800 x 800	936 x 936	104	80	D400	135,26	445642
900 x 900	1036 x 1036	104	80	D400	157,93	445643
1000 x 1000	1136 x 1136	104	80	D400	184,97	445644

ACO Access Cover PAVING GS 120

Product information

- Type tested and certified according to EN 124
- Equipped with a seal
- Corrosion resistant – hot dip galvanized mild steel
- Secure and time saving installation
- No risk – load capacity always guaranteed
- 120 tray depth available
- Secured in the frame by its own weight - child safety
- Stainless steel version available on request (1.4301 or 1.4571)
- Watertightness tested (not certified) acc. to EN 1253-4 *

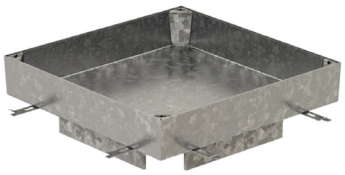

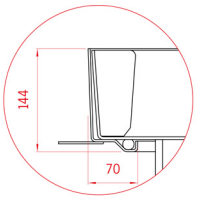

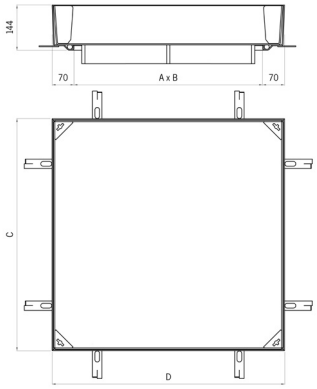

* Watertightness test procedure acc. to EN 1253-4: water flooding 10±1 mm for time period 15±1m – no leak of water to the bottom side of cover supervised by Authorized body 204.

Order information

Clear opening (A x B) [mm]	External dimensions (C x D) [mm]	Frame height [mm]	Cover depth [mm]	Load class (EN 124)	Weight [kg]	Part No. GS (1.0037)
300 x 300	439 x 439	144	120	B125	26	414487
400 x 400	539 x 539	144	120	B125	35,7	414488
400 x 600	539 x 739	144	120	B125	43,6	414538
500 x 500	639 x 639	144	120	B125	44	414489
600 x 600	739 x 739	144	120	B125	52,4	414490
600 x 1000	739 x 1139	144	120	B125	82	414539
700 x 700	839 x 839	144	120	B125	73	414491
800 x 800	939 x 939	144	120	B125	83,5	414492
900 x 900	1039 x 1039	144	120	B125	94,2	414493
1000 x 1000	1139 x 1139	144	120	B125	105,9	414494
300 x 300	439 x 439	144	120	C250	32,5	414495
400 x 400	539 x 539	144	120	C250	51,1	414496
400 x 600	539 x 739	144	120	C250	64,1	414540
500 x 500	639 x 639	144	120	C250	66,5	414497
600 x 600	739 x 739	144	120	C250	78,6	414498
600 x 1000	739 x 1139	144	120	C250	114,5	414541
700 x 700	839 x 839	144	120	C250	101,9	414499
800 x 800	939 x 939	144	120	C250	116,3	414500
900 x 900	1039 x 1039	144	120	C250	131	414501
1000 x 1000	1139 x 1139	144	120	C250	147	414502
400 x 400	539 x 539	144	120	D400	50,42	445645
500 x 500	639 x 639	144	120	D400	69,08	445646
600 x 600	739 x 739	144	120	D400	90,19	445647
700 x 700	839 x 839	144	120	D400	111,04	445648
800 x 800	939 x 939	144	120	D400	145,97	445649
900 x 900	1039 x 1039	144	120	D400	169,42	445650
1000 x 1000	1139 x 1139	144	120	D400	197,64	445651

ACO Access Cover PAVING ASSIST GS 80

Product information

- Option with opening assistance
- Equipped with a seal
- One man operation, hinges, gas springs (installed afterwards from safety reasons)
- Locked by two bolts
- Stainless steel version availble on request (1.4301 or 1.4571)
- Watertightness tested (not certified) acc. to EN 1253-4 *

* Watertightness test procedure acc. to EN 1253-4: water flooding 10±1 mm for time period 15±1m – no leak of water to the bottom side of cover supervised by Authorized body 204.

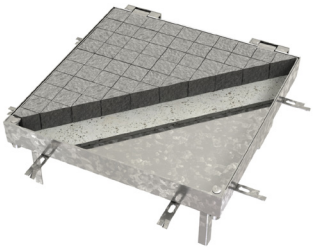

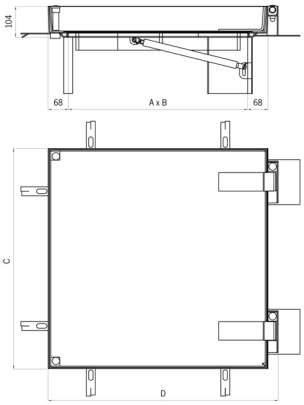

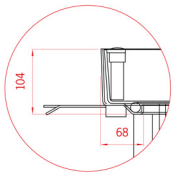

Order information

Clear opening (A x B) [mm]	External dimensions (C x D) [mm]	Frame height [mm]	Cover depth [mm]	Load class (EN 124)	Weight [kg]	Part No. GS (1.0037)
400 x 400	536 x 570	104	80	A15	29,4	414504
500 x 500	636 x 670	104	80	A15	34,4	414505
600 x 600	736 x 770	104	80	A15	40,9	414506
700 x 700	836 x 870	104	80	A15	48,9	414507
800 x 800	936 x 970	104	80	A15	55,6	414508
900 x 900	1036 x 1070	104	80	A15	64,6	414509
1000 x 1000	1136 x 1170	104	80	A15	74,1	414510
400 x 400	536 x 570	104	80	B125	39,1	414512
500 x 500	636 x 670	104	80	B125	46	414513
600 x 600	736 x 770	104	80	B125	54,5	414514
700 x 700	836 x 870	104	80	B125	73,8	414515
800 x 800	936 x 970	104	80	B125	85,1	414516
900 x 900	1036 x 1070	104	80	B125	94	414517
1000 x 1000	1136 x 1170	104	80	B125	108	414518
400 x 400	536 x 570	104	80	C250	52,3	414520
500 x 500	636 x 670	104	80	C250	66,8	414521
600 x 600	736 x 770	104	80	C250	78,7	414522
700 x 700	836 x 870	104	80	C250	100,6	414523
800 x 800	936 x 970	104	80	C250	115,7	414524
900 x 900	1036 x 1070	104	80	C250	129,8	414525
1000 x 1000	1136 x 1170	104	80	C250	146,4	414526
400 x 400	536 x 570	104	80	D400	49,87	445624
500 x 500	636 x 670	104	80	D400	66,15	445625
600 x 600	736 x 770	104	80	D400	87,29	445626
700 x 700	836 x 870	104	80	D400	106,75	445627
800 x 800	936 x 970	104	80	D400	131,69	445628
900 x 900	1036 x 1070	104	80	D400	153,23	445629
1000 x 1000	1136 x 1170	104	80	D400	182,58	445630

ACO Access Cover PAVING ASSIST GS 120

Product information

- Option with opening assistance
- Equipped with a seal
- One man operation, hinges, gas springs (installed afterwards from safety reasons)
- Locked by two bolts
- Stainless steel version availble on request (1.4301 or 1.4571)
- Watertightness tested (not certified) acc. to EN 1253-4 *

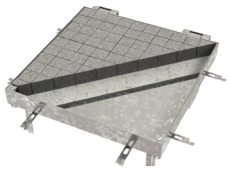

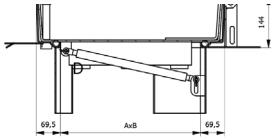

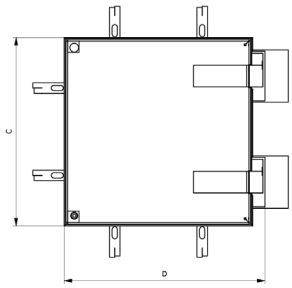

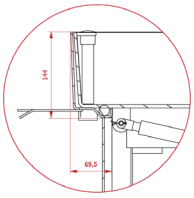

* Watertightness test procedure acc. to EN 1253-4: water flooding 10±1 mm for time period 15±1m – no leak of water to the bottom side of cover supervised by Authorized body 204.

Order information

Clear opening (A x B) [mm]	External dimensions (C x D) [mm]	Frame height [mm]	Cover depth [mm]	Load class (EN 124)	Weight [kg]	Part No. GS (1.0037)
400 x 400	539 x 574	144	120	D400	56,27	445631
500 x 500	639 x 674	144	120	D400	76,13	445632
600 x 600	739 x 774	144	120	D400	97,68	445633
700 x 700	839 x 874	144	120	D400	119,85	445634
800 x 800	939 x 974	144	120	D400	144,23	445635
900 x 900	1039 x 1074	144	120	D400	169,61	445636
1000 x 1000	1139 x 1174	144	120	D400	195,85	445637

ACO Access Cover PAVING AL

Product information

- Excellent optic aesthetics
- Alluminium alloy
- Covers are equipped with sealing (no watertightness declaration)
- Trouble-free installation
- Precise tolerances – symmetrical gap between frame and lid
- 2 operating keys
- Load class capacity 30 kN guaranteed and certified (EN124)
  - Concrete C35/45 mandatory (level 30 mm)
  - Fully filled with C35/45 resist B125 (EN124)

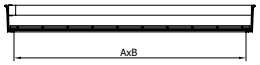

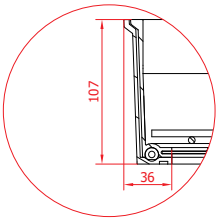

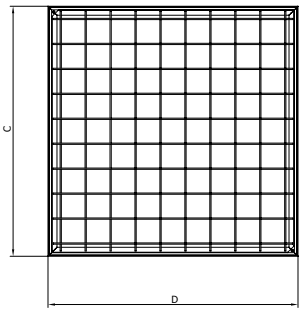

Order information

Clear opening (A x B) [mm]	External dimensions (C x D) [mm]	Frame height [mm]	Cover depth [mm]	Space for final floor [mm]	Load class (EN 124)	Weight [kg]	Part No. AL
230 x 230	300 x 300	107	95	up to 65	30kN	3,3	450337
330 x 330	400 x 400	107	95	up to 65	30kN	4,9	450338
430 x 430	500 x 500	107	95	up to 65	30kN	6,5	450339
530 x 530	600 x 600	107	95	up to 65	30kN	8,3	450340
630 x 630	700 x 700	107	95	up to 65	30kN	10,2	450341
730 x 730	800 x 800	107	95	up to 65	30kN	12,3	450342
830 x 830	900 x 900	107	95	up to 65	30kN	14,6	450343
930 x 930	1000 x 1000	107	95	up to 65	30kN	17,3	450344
200 x 200	270 x 270	107	95	up to 65	30kN	2,9	450345
300 x 300	370 x 370	107	95	up to 65	30kN	4,4	450346
450 x 450	520 x 520	107	95	up to 65	30kN	5,7	450347
500 x 500	570 x 570	107	95	up to 65	30kN	7,3	450348
600 x 450	670 x 520	107	95	up to 65	30kN	8,0	450349
600 x 600	670 x 670	107	95	up to 65	30kN	9,1	450350
750 x 600	820 x 670	107	95	up to 65	30kN	11,0	450351
750 x 750	820 x 820	107	95	up to 65	30kN	13,0	450352
900 x 600	970 x 670	107	95	up to 65	30kN	12,0	450353
900 x 750	970 x 820	107	95	up to 65	30kN	14,0	450354
900 x 900	970 x 970	107	95	up to 65	30kN	15,1	450355

ACO Access Cover PAVING MULTI

Product information

- Option for oversize multipart solutions
- Removable support beams make it possible to use the whole clear opening of the cover
- Trouble-free removal and assembly
- Individually designed
- Covers are not watertight

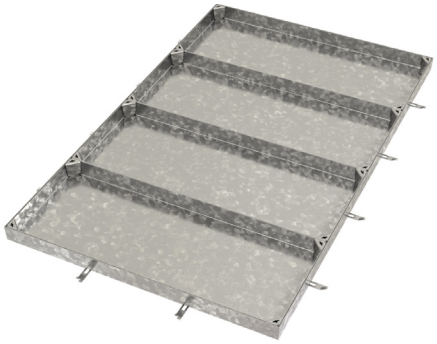

ACO Access Cover SOLID

Product information

Suitable for light industrial applications, where simple and lightweight covers are required. Surface of the cover is formed by anti slip tread “checker” plate. Optimized supports are welded underneath of the cover which guarantee declared load capacity.

- No concrete or any other additional structural infill necessary
- Type tested and certified according to EN 124
- Equipped with a seal
- Bolt locked – child safety
- Corrosion resistant
- Secure and time saving installation
- No risk – load capacity always guaranteed
- Durable
- Watertightness declared based on product ranges listed below

ACO Access Cover SOLID GS/SS

Product information

- Load capacity up to load class B125 for all clear openings up to 1 m
- Hot dip galvanized mild steel (≥ 60 µm of zinc) or pickle passivated stainless steel
- Cover weight ca 30 kg (600×600, B125)
- Frame height 59,5 mm
- Highest grade of stainless steel (1.4571) available on request
- Covers are equipped with sealing
- Watertightness tested (not certified) acc. to EN 1253-4 *

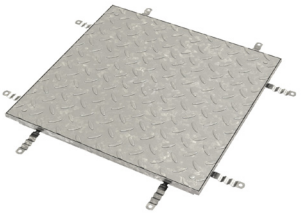

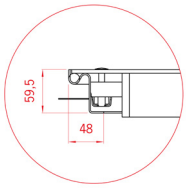

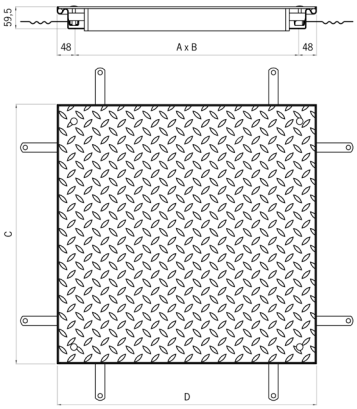

* Watertightness test procedure acc. to EN 1253-4: water flooding 10±1 mm for time period 15±1m – no leak of water to the bottom side of cover supervised by Authorized body 204.

Order information

Clear opening (A x B) [mm]	External dimensions (C x D) [mm]	Frame height [mm]	Load class (EN 124)	Weight [kg]	Part No. GS (1.0037)	Part No. SS (1.4301)
300 x 300	396 x 396	59,5	A15	11,2	403868	403860
400 x 600	496 x 696	59,5	A15	20,6	403871	403863
450 x 450	546 x 546	59,5	A15	18,7	403869	403861
500 x 500	596 x 596	59,5	A15	20,8	403870	403862
600 x 600	696 x 696	59,5	A15	26,9	403912	403909
600 x 800	696 x 896	59,5	A15	36,1	403873	403865
600 x 1000	696 x 1096	59,5	A15	42,8	403874	403866
635 x 635	731 x 731	59,5	A15	32	403872	403864
800 x 800	896 x 896	59,5	A15	44,3	403913	403910
800 x 1000	896 x 1096	59,5	A15	52,8	403875	403867
1000 x 1000	1096 x 1096	59,5	A15	62,4	403914	403911
300 x 300	396 x 396	59,5	B125	14,9	403898	403887
400 x 600	496 x 696	59,5	B125	28,2	403901	403890
450 x 450	546 x 546	59,5	B125	25,5	403899	403888
500 x 500	596 x 596	59,5	B125	28,5	403900	403889
600 x 600	696 x 696	59,5	B125	35,5	403902	403891
600 x 800	696 x 896	59,5	B125	50,2	403904	403893
600 x 1000	696 x 1096	59,5	B125	57,9	403906	403895
635 x 635	731 x 731	59,5	B125	45,6	403903	403892
800 x 800	896 x 896	59,5	B125	64,5	403905	403894
800 x 1000	896 x 1096	59,5	B125	73,7	403907	403896
1000 x 1000	1096 x 1096	59,5	B125	84,6	403908	403897

ACO Access Cover SOLID ASSIST GS/SS

Product information

- Option with opening assistance
- One man operation, hinges
- Ready to use - gas springs already installed
- Locked by two bolts
- Highest grade of stainless steel (1.4571) available on request
- Covers are equipped with sealing
- Watertightness tested (not certified) acc. to EN 1253-4 *

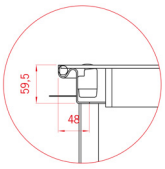

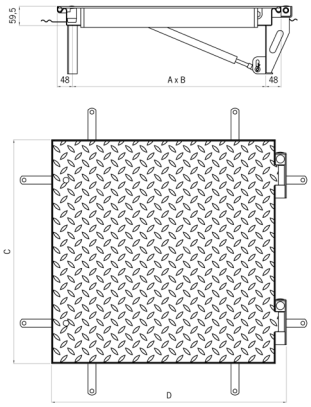

* Watertightness test procedure acc. to EN 1253-4: water flooding 10±1 mm for time period 15±1m – no leak of water to the bottom side of cover supervised by Authorized body 204.

Order information

Clear opening (A x B) [mm]	External dimensions (C x D) [mm]	Frame height [mm]	Load class (EN 124)	Weight [kg]	Part No. GS (1.0037)	Part No. SS (1.4301)
500 x 500	630 x 596	59,5	A15	25,5	415205	415217
600 x 600	730 x 696	59,5	A15	31,7	415206	415218
700 x 700	830 x 796	59,5	A15	44,5	415207	415219
800 x 800	930 x 896	59,5	A15	49,4	415208	415220
900 x 900	1030 x 996	59,5	A15	56,1	415209	415221
1000 x 1000	1130 x 1096	59,5	A15	69	415210	415222
500 x 500	630 x 596	59,5	B125	32,8	415211	415223
600 x 600	730 x 696	59,5	B125	39,6	415212	415224
700 x 700	830 x 796	59,5	B125	53,4	415213	415225
800 x 800	930 x 896	59,5	B125	68,5	415214	415226
900 x 900	1030 x 996	59,5	B125	76,6	415215	415227
1000 x 1000	1130 x 1096	59,5	B125	90,6	415216	415228
450 x 450	577 x 542	60	A15	23,5	445721	445722
450 x 600	577 x 692	60	A15	27,2	445725	445726
600 x 750	727 x 842	60	A15	37	445730	445729
750 x 750	877 x 842	60	A15	43,5	445734	445733
600 x 900	727 x 992	60	A15	41,6	445738	445737
600 x 1000	727 x 1092	60	A15	47,3	445742	445741
450 x 450	577 x 542	60	B125	31,3	445723	445724
450 x 600	577 x 692	60	B125	36	445727	445728
600 x 750	727 x 842	60	B125	53,7	445732	445731
750 x 750	877 x 842	60	B125	65,5	445736	445735
600 x 900	727 x 992	60	B125	59,7	445740	445739
600 x 1000	727 x 1092	60	B125	66,1	445744	445743

ACO Access Cover SOLID AL

Product information

- Load capacity up to load class A15 for all clear openings up to 1 m
- Highest grade of aluminium alloy for “checker” plate
- Excellent corrosion resistance
- Crimped frame
- Lightest solution - cover weight ca 10 kg (600×600, A15)
- Frame height 37,5 mm only
- Covers are equipped with sealing
- Watertightness tested (not certified) acc. to EN 1253-4 *

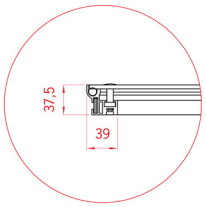

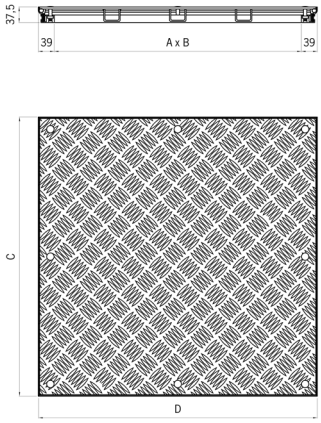

* Watertightness test procedure acc. to EN 1253-4: water flooding 10±1 mm for time period 15±1m – no leak of water to the bottom side of cover supervised by Authorized body 204.

Order information

Clear opening (A x B) [mm]	External dimensions (C x D) [mm]	Frame height [mm]	Load class (EN 124)	Weight [kg]	Part No. AL
200 x 200	278 x 278	37,5	K3	2,75	415200
300 x 300	378 x 378	37,5	K3	4,01	415201
400 x 400	478 x 478	37,5	K3	5,54	415202
500 x 500	578 x 578	37,5	K3	7,65	415203
600 x 600	678 x 678	37,5	K3	9,75	415204
200 x 200	278 x 278	37,5	A15	3,05	408981
300 x 300	378 x 378	37,5	A15	4,45	408982
400 x 400	478 x 478	37,5	A15	6,15	408983
400 x 600	478 x 678	37,5	A15	8,2	408986
450 x 450	528 x 528	37,5	A15	7,05	408984
500 x 500	578 x 578	37,5	A15	8,35	408985
600 x 600	678 x 678	37,5	A15	11,05	408987
600 x 800	678 x 878	37,5	A15	13,7	408989
600 x 1000	678 x 1078	37,5	A15	15,9	408992
700 x 700	778 x 778	37,5	A15	13,6	408988
800 x 800	878 x 878	37,5	A15	17	408990
800 x 1000	878 x 1078	37,5	A15	19,75	408993
900 x 900	978 x 978	37,5	A15	20,15	408991
1000 x 1000	1078 x 1078	37,5	A15	24,65	408994

ACO Access Cover SOLID MULTI GS/SS

Product information

- Option for oversize multipart solutions
- Removable support beams make it possible to use the whole clear opening of the cover
- Trouble-free removal and assembly
- Individually designed
- Covers are equipped with sealing
- Covers are not watertight

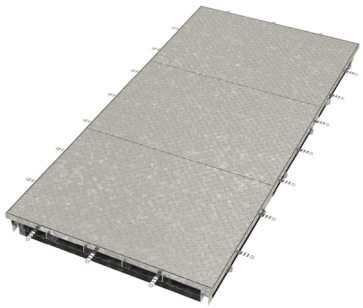

ACO Access Cover LIFTER

Product information

- Transport and operation-friendly device
- Convenient and stable manipulation by one person
- Designed for lifting all ACO Access Covers product ranges (Uniface, Paving, Solid) except Paving FR
- Adjustable lifting height - from 0 mm up to 270 mm
- No special crane required on site
- Lifting weights other than ACO Access Covers is not permitted!

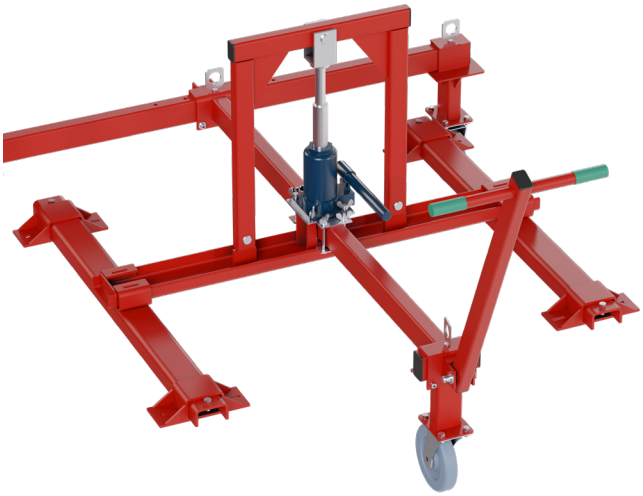

ACO Access Covers applications

- 300 mm – 1000 mm (Axis XY)
- Max. dimensions: 1000x1000 mm
- Max. load: 6000N **(no homologation)**

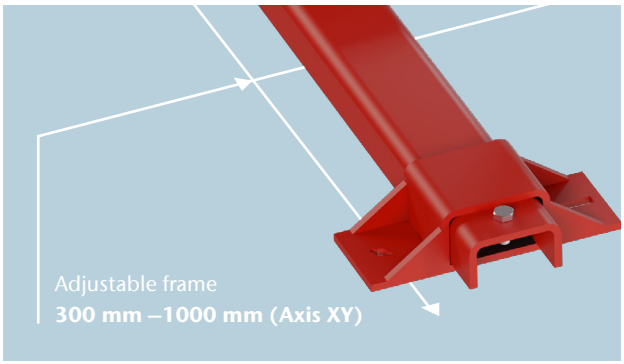

Weight [kg]	Part No.
192	451117

Suitable to use for every kind of terrain

- 3x rubber coated wheels Ø200 mm
- Securing against movement

ACO Access Cover Fire Resistance (FR)

Product information

The ACO Access Covers Fire Resistance (FR) have been developed to provide a practical and safe access solution to underneath areas. In the event of fire, closing the ACO Access Covers resists fire to protect the area above the cover, thus significantly contributing to the protection of local areas and floors.

Fire resistance of ACO Access Covers (FR) is E120, $EI_1$45, $EI_2$45, up to $EI_1$120, $EI_2$120 depending on the ACO Access Cover (FR) product range.

- The integrity of fire resistance has been performed and assessed by the authorised laboratory PAVUS a.s. (authorised body AO 216) according to EN 1634-1 + A1, EN 1363-1, ČSN 73 0810.
- The fire resistance classification of ACO Access Covers is declared by „Fire classification approval of fire resistance“.

ACO Access Cover UNIFACE GS/FR

Product information

- Fire resistance E120, EI_1120, EI_2120 (tested according to EN 1634-1 + A1, EN 1363-1, ČSN 73 0810) assured with a fire resistance equipment
- Application of concrete C35/45 in cover lid
- Watertightness tested (not certified) acc. to EN 1253-4 *

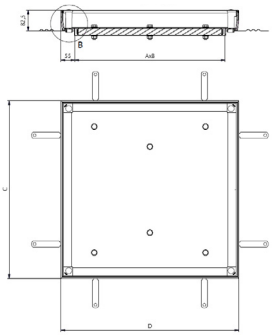

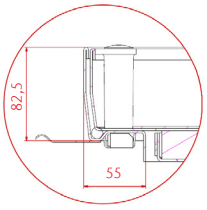

* Watertightness test procedure acc. to EN 1253-4: water flooding 10±1 mm for time period 15±1m – no leak of water to the bottom side of cover supervised by Authorized body 204.

Order information

Clear opening (A x B) [mm]	External dimensions (C x D) [mm]	Frame height [mm]	Cover depth [mm]	Space for final floor [mm]	Load class (EN 1253)	Weight [kg]	E	EI	Part No. GS (1.0037)
635x635	745x745	82,5	70	15	L15	37,1	E120	EI120	447888
700x700	810x810	82,5	70	15	L15	42,7	E120	EI120	447889
800x800	910x910	82,5	70	15	L15	52,2	E120	EI120	447890
800x1000	910x1110	82,5	70	15	L15	61,8	E120	EI120	447891
1000x1000	1110x1110	82,2	70	15	L15	73,4	E120	EI120	447892
600x800	710x910	82,5	110	15	N250	45,7	E120	EI120	447896
600x1000	710x1110	82,5	110	15	N250	54	E120	EI120	447897
635x635	745x745	82,5	140	15	N250	41,6	E120	EI120	447903
700x700	810x810	82,5	140	15	N250	48	E120	EI120	447904
800x800	910x910	82,5	140	15	N250	58	E120	EI120	447905
800x1000	910x1110	82,5	140	15	N250	68,4	E120	EI120	447906
1000x1000	1110x1110	82,5	140	15	N250	80,7	E120	EI120	447907
600 x 600	710 x 710	82,5	70	15	M125	25,2	E120	EI120	447884
600x800	710x910	82,5	70	15	M125	42,5	E120	EI120	447885
600x1000	710x1110	82,5	70	15	M125	50,4	E120	EI120	447886
635x635	745x745	82,5	110	15	M125	40,2	E120	EI120	447898
700x700	810x810	82,5	110	15	M125	46,2	E120	EI120	447899
800x800	910x910	82,5	110	15	M125	55,9	E120	EI120	447900
800x1000	910x1110	82,5	110	15	M125	66	E120	EI120	447901
1000x1000	1110x1110	82,5	110	15	M125	78	E120	EI120	447902
600 x 600	710 x 710	82,5	110	15	N250	25,4	E120	EI120	447895

ACO Access Cover UNIFACE SS/FR

Product information

- Fire resistance E120, EI_1120, EI_2120 (tested according to EN 1634-1 + A1, EN 1363-1, ČSN 73 0810) assured by fire resistance equipment
- Application of concrete C35/45 in cover lid
- Watertightness tested (not certified) acc. to EN 1253-4 *

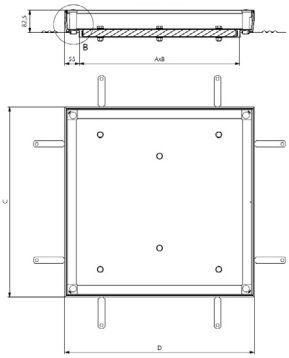

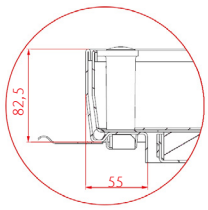

* Watertightness test procedure acc. to EN 1253-4: water flooding 10±1 mm for time period 15±1m – no leak of water to the bottom side of cover supervised by Authorized body 204.

Order information

Clear opening (A x B) [mm]	External dimensions (C x D) [mm]	Frame height [mm]	Cover depth [mm]	Space for final floor [mm]	Load class (EN 1253)	Weight [kg]	E	EI	Part No. SS (1.4301)
300 x 300	410 x 410	82,5	70	15	N250	10,9	E120	EI120	447908
400 x 400	510 x 510	82,5	70	15	N250	14,9	E120	EI120	447909
400 x 600	510 x 710	82,5	70	15	N250	19,3	E120	EI120	447910
450 x 450	560 x 560	82,5	70	15	M125	17,4	E120	EI120	447911
500 x 500	610 x 610	82,5	70	15	M125	19,6	E120	EI120	447912
600 x 600	710 x 710	82,5	70	15	M125	25,2	E120	EI120	447913
600 x 800	710 x 910	82,5	70	15	M125	33,2	E120	EI120	447914
600 x 1000	710 x 1110	82,5	70	15	M125	39,7	E120	EI120	447915
635 x 635	745 x 745	82,5	70	15	L15	29,2	E120	EI120	447917
700 x 700	810 x 810	82,5	70	15	L15	33,6	E120	EI120	447918
800 x 800	910 x 910	82,5	70	15	L15	41,3	E120	EI120	447919
800 x 1000	910 x 1110	82,5	70	15	L15	49,4	E120	EI120	447920
1000 x 1000	1110 x 1110	82,5	70	15	L15	59,1	E120	EI120	447921
450 x 450	560 x 560	82,5	110	15	N250	17,6	E120	EI120	447922
500 x 500	610 x 610	82,5	110	15	N250	19,8	E120	EI120	447923
600 x 600	710 x 710	82,5	110	15	N250	25,4	E120	EI120	447924
600 x 800	710 x 910	82,5	110	15	N250	33,9	E120	EI120	447925
600 x 1000	710 x 1110	82,5	110	15	N250	40,9	E120	EI120	447926
635 x 635	745 x 745	82,5	110	15	M125	29,3	E120	EI120	447927
700 x 700	810 x 810	82,5	110	15	M125	34,1	E120	EI120	447928
800 x 800	910 x 910	82,5	110	15	M125	42	E120	EI120	447929
800 x 1000	910 x 1110	82,5	110	15	M125	47,2	E120	EI120	447930
1000 x 1000	1110 x 1110	82,5	110	15	M125	60,1	E120	EI120	447931
635 x 635	745 x 745	82,5	140	15	N250	30,3	E120	EI120	447932
700 x 700	810 x 810	82,5	140	15	N250	35,1	E120	EI120	447933
800 x 800	910 x 910	82,5	140	15	N250	43	E120	EI120	447934
800 x 1000	910 x 1110	82,5	140	15	N250	43,3	E120	EI120	447935
1000 x 1000	1110 x 1110	82,5	140	15	N250	61,1	E120	EI120	447936

ACO Access Cover UNIFACE AL/FR

Product information

- Fire resistance E120, $EI_1$120, $EI_2$120 (tested according to EN 1634-1 + A1, EN 1363-1, ČSN 73 0810) assured with a fire resistance equipment
- Meets declared load class up to M125
- Corrosion resistant aluminium alloy
- Watertightness tested (not certified) acc. to EN 1253-4 *

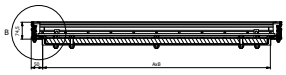

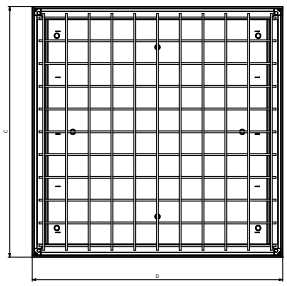

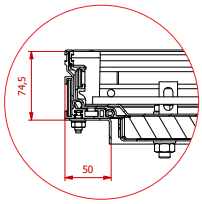

* Watertightness test procedure acc. to EN 1253-4: water flooding 10±1 mm for time period 15±1m – no leak of water to the bottom side of cover supervised by Authorized body 204.

Order information

Clear opening (A x B) [mm]	External dimensions (C x D) [mm]	Frame height [mm]	Cover depth [mm]	Space for final floor [mm]	Load class (EN 1253)	Weight [kg]	E	EI	Part No. AL
600x600	698x698	74,5	70	15	M125	28,7	E120	EI120	447984
600x750	698x848	74,5	70	15	M125	34,5	E120	EI120	447972
600x800	698x898	74,5	70	15	M125	36,5	E120	EI120	447986
600x900	698x998	74,5	70	15	M125	39,8	E120	EI120	447975
635x635	733x733	74,5	70	15	L15	34,4	E120	EI120	447978
675x675	773x773	74,5	70	15	L15	36,8	E120	EI120	447973
700x700	798x798	74,5	70	15	L15	36,8	E120	EI120	447987
750x750	848x848	74,5	70	15	L15	40,7	E120	EI120	447974
800x800	898x898	74,5	70	15	L15	45,4	E120	EI120	447988
800x1000	898x1098	74,5	70	15	L15	54,6	E120	EI120	447989
900x900	998x998	74,5	70	15	L15	54,9	E120	EI120	447977
1000x1000	1098x1098	74,5	70	15	L15	65,4	E120	EI120	447990

ACO Access Cover UNIFACE ASSIST GS/FR

Product information

- Fire resistance E120, EI_1120, EI_2120 (tested according to EN 1634-1 + A1, EN 1363-1, ČSN 73 0810) assured by fire resistance equipment
- Application of concrete C35/45 in cover lid
- Watertightness tested (not certified) acc. to EN 1253-4 *
- Meets declared load class up to N250
- Clear opening up to 1 m
- Locked by two bolts

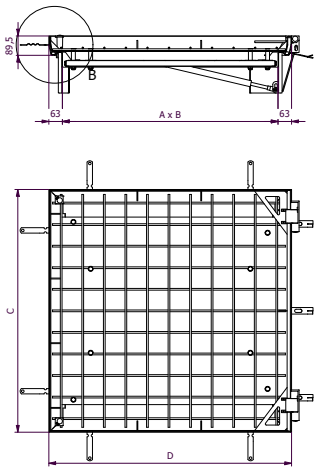

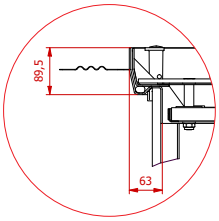

* Watertightness test procedure acc. to EN 1253-4: water flooding 10±1 mm for time period 15±1m – no leak of water to the bottom side of cover supervised by Authorized body 204.

Order information

Clear opening (A x B) [mm]	External dimensions (C x D) [mm]	Frame height [mm]	Cover depth [mm]	Space for final floor [mm]	Load class (EN 1253)	Weight [kg]	E	EI	Part No. GS (1.0037)
600 x 600	726 x 726	89	70	15	M125	52	E120	EI120	447939
800 x 800	926 x 926	89	70	15	L15	76	E120	EI120	447940
1000 x 1000	1126 x 1126	89	70	15	L15	100	E120	EI120	447941
600 x 600	726 x 726	89	110	15	N250	52	E120	EI120	447943
800 x 800	926 x 926	89	110	15	M125	75	E120	EI120	447944
600 x 800	726 x 926	89	70	15	M125	62	E120	EI120	447945
800 x 1000	926 x 1126	89	70	15	L15	87	E120	EI120	447946
600 x 750	726 x 876	89	70	15	M125	59	E120	EI120	447949
600 x 900	726 x 1026	89	70	15	M125	66	E120	EI120	447950
900 x 900	1026 x 1026	89	110	15	M125	86	E120	EI120	447951
600 x 1000	726 x 1126	89	70	15	M125	72	E120	EI120	447952
750 x 750	876 x 876	89	70	15	L15	69	E120	EI120	447953

ACO Access Cover PAVING GS 80/FR

Product information

- Fire resistance E120, $EI_1$45, $EI_2$45 (tested according to EN 1634-1 + A1, EN 1363-1, ČSN 73 0810) assured by fire resistance equipment
- Other features on page 15
- Watertightness tested (not certified) acc. to EN 1253-4 *

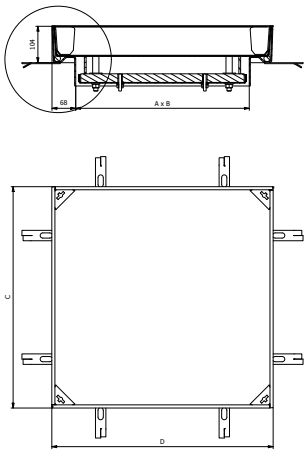

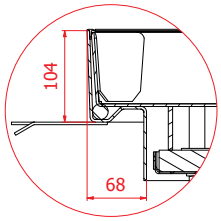

* Watertightness test procedure acc. to EN 1253-4: water flooding 10±1 mm for time period 15±1m – no leak of water to the bottom side of cover supervised by Authorized body 204.

Order information

Clear opening (A x B) [mm]	External dimensions (C x D) [mm]	Frame height [mm]	Cover depth [mm]	Load class (EN 124)	Weight [kg]	E	EI	Part No. GS (1.0037)
400 x 400	536 x 536	104	80	A15	24,6	E120	EI45	447992
500 x 500	636 x 636	104	80	A15	31,5	E120	EI45	447993
600 x 600	736 x 736	104	80	A15	32,2	E120	EI45	447994
400 x 600	536 x 736	104	80	A15	40,5	E120	EI45	447995
400 x 400	536 x 536	104	80	B125	33,9	E120	EI45	448003
500 x 500	636 x 636	104	80	B125	43,1	E120	EI45	448004
600 x 600	736 x 736	104	80	B125	53,0	E120	EI45	448005
400 x 600	536 x 736	104	80	B125	42,5	E120	EI45	448010
400 x 400	536 x 536	104	80	C250	48,7	E120	EI45	448013
500 x 500	636 x 636	104	80	C250	65,0	E120	EI45	448014
600 x 600	736 x 736	104	80	C250	78,4	E120	EI45	448015
400 x 600	536 x 736	104	80	C250	62,2	E120	EI45	448020
400 x 400	536 x 536	104	80	D400	47,3	E120	EI45	448022
500 x 500	636 x 636	104	80	D400	66,6	E120	EI45	448023
600 x 600	736 x 736	104	80	D400	88,9	E120	EI45	448024

ACO Access Cover PAVING GS 120/FR

Product information

- Fire resistance E120, $EI_1$45, $EI_2$45 (tested according to EN 1634-1 + A1, EN 1363-1, ČSN 73 0810) assured by fire resistance equipment
- Other features on page 16
- Watertightness tested (not certified) acc. to EN 1253-4 *

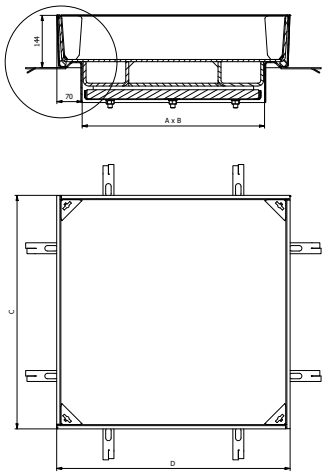

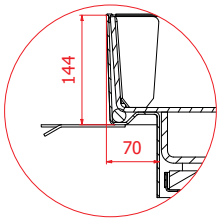

* Watertightness test procedure acc. to EN 1253-4: water flooding 10±1 mm for time period 15±1m – no leak of water to the bottom side of cover supervised by Authorized body 204.

Order information

Clear opening (A x B)	External dimensions (C x D)	Frame height	Cover depth	Load class (EN 124)	Weight	E	EI	Part No. GS
[mm]	[mm]	[mm]	[mm]		[kg]			(1.0037)
400 x 400	539 x 539	144	120	B125	38,7	E120	EI45	448030
500 x 500	639 x 639	144	120	B125	48,8	E120	EI45	448031
600 x 600	739 x 739	144	120	B125	59,5	E120	EI45	448032
400 x 400	539 x 539	144	120	C250	54,1	E120	EI45	448038
500 x 500	639 x 639	144	120	C250	71,3	E120	EI45	448039
600 x 600	739 x 739	144	120	C250	85,7	E120	EI45	448040
400 x 600	539 x 739	144	120	B125	48,2	E120	EI45	448045
400 x 600	539 x 739	144	120	C250	68,7	E120	EI45	448047
400 x 400	539 x 539	144	120	D400	53,4	E120	EI45	448049
500 x 500	639 x 639	144	120	D400	73,9	E120	EI45	448050
600 x 600	739 x 739	144	120	D400	97,3	E120	EI45	448051

ACO Access Cover SOLID FR

Product information

- Fire resistance E120, $EI_1$45, $EI_2$45 (tested according to EN 1634-1 + A1, EN 1363-1, ČSN 73 0810) assured with a fire resistance equipment
- Covers are equipped by single seal
- Other features on page 21
- Watertightness tested (not certified) acc. to EN 1253-4 *

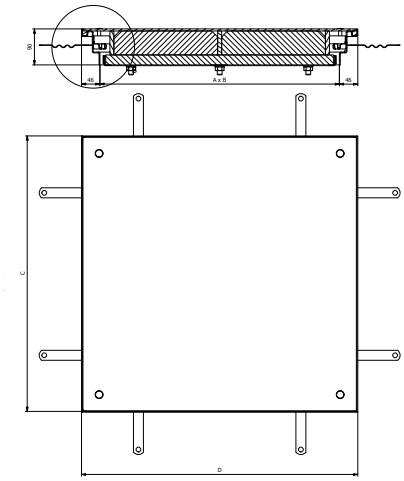

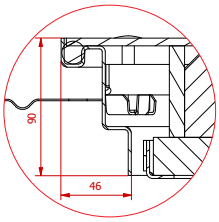

* Watertightness test procedure acc. to EN 1253-4: water flooding 10±1 mm for time period 15±1m – no leak of water to the bottom side of cover supervised by Authorized body 204.

Order information

Clear opening (A x B) [mm]	External dimensions (C x D) [mm]	Frame height [mm]	Load class (EN 124)	Weight [kg]	E	EI	Part No. GS (1.0037)
300 x 300	392x392	90	A15	14,7	E120	EI45	448093
450 x 450	542x542	90	A15	24,7	E120	EI45	448094
500 x 500	592x592	90	A15	28,7	E120	EI45	448095
400 x 400	492x492	90	A15	21	E120	EI45	448096
300 x 300	392x392	90	B125	18,4	E120	EI45	448101
450 x 450	542x542	90	B125	32,2	E120	EI45	448102
500 x 500	592x592	90	B125	36,5	E120	EI45	448103
400 x 400	492x492	90	B125	28,1	E120	EI45	448104
600 x 600	692x692	90	B125	46	E120	EI45	448105
600 x 600	692x692	90	A15	37,5	E120	EI45	448112

Gas Spring Set – Spare Parts

PAVING ASSIST GS80

Part No. Cover	Part No. GS (1.0037)
414504	414569
414505	414570
414506	414571
414507	414572
414508	414573
414509	414574
414510	414575
414512	414576
414513	414577
414514	414578
414515	414579
414516	414580
414517	414581
414518	414582
414520	414583
414521	414584
414522	414585
414523	414586
414524	414587
414525	414588
414526	414589
445624	414583
445625	414584
445626	414585
445627	414586
445628	414587
445629	446316
445630	446317

PAVING ASSIST GS120

Part No. Cover	Part No. GS (1.0037)
445631	446691
445632	446692
445633	446693
445634	446694
445635	446695
445636	446696
445637	446697

SOLID ASSIST GS/SS

Part No. Cover	Part No. GS (1.0037)	Part No. SS (1.4301)
415205	445520	
415206	445521	
415207	445522	
415208	445523	
415209	445524	
415210	445525	
415211	445526	
415212	445527	
415213	445528	
415214	445529	
415215	445530	
415216	445531	
415217		445532
415218		445533
415219		445534
415220		445535
415221		445536
415222		445537
415223		445538
415224		445539
415225		445540
415226		445541
415227		445542
415228		445543
445721	446486	
445723	446488	
445725	446490	
445727	446492	
445730	446495	
445732	446497	
445734	446499	
445736	446501	
445738	446503	
445740	446505	
445742	446507	
445744	446509	
445722		446487
445724		446489
445726		446491
445728		446493
445729		446494
445731		446496

SOLID ASSIST GS/SS

Part No. Cover	Part No. GS (1.0037)	Part No. SS (1.4301)
445733		446498
445735		446500
445737		446502
445739		446504
445741		446506
445743		446508

UNIFACE ASSIST GS/SS

Part No. Cover	Part No. GS (1.0037)	Part No. SS (1.4301)
406537	409844	
406538	409845	
406539	409846	
406540	409847	
406541	409848	
406542	409849	
406543	409850	
406544	409851	
408713	409853	
414951	414997	
406529		409836
406530		409837
406531		409838
406532		409839
406533		409840
406534		409841
406535		409842
406536		409843
408712		409852
414950		414996
445684	446140	
445686	446142	
445688	446144	
445690	446146	
445692	446148	
445694	446150	
445754	446152	
445685		446141
445687		446143
445689		446145
445691		446147
445693		446149
445695		446151
445755		446153

Screws and Caps – Spare Parts

		Bag with accessories	Single screw / single cap
ACO Access Covers UNIFACE	ACO Access Cover UNIFACE 2.0 GS/SS	416148	NM1101 / 90673
	ACO Access Cover UNIFACE AL - H = 72,5 mm	406650	NM1231 / 96399
	ACO Access Cover UNIFACE AL shallow - H = 50 mm	415199	NM7999 / 96399
	ACO Access Cover UNIFACE SMART AL - H = 50 mm	415199	NM7999 / 96399
	ACO Access Cover UNIFACE ASSIST GS/SS	406649	90591 / 90673
ACO Access Covers PAVING	ACO Access Cover PAVING GS 80	401759	
	ACO Access Cover PAVING ASSIST GS 80	446698	NM1322 / 90673
ACO Access Covers SOLID	ACO Access Cover SOLID GS/SS	400569	NM3266 / NM7002
	ACO Access Cover SOLID ASSIST GS/SS	446622	NM3266 / NM7002
	ACO Access Cover SOLID AL	400569	NM8006 / NM7002

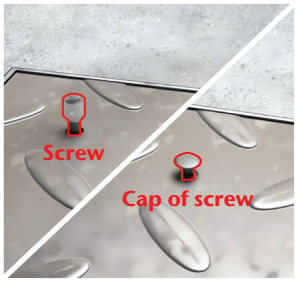

All our products are fully certified

Safety and functionality is our priority in the development of access covers. During the development we can rely on many strength calculations, tests and real applications that we have implemented in recent years.

We aim to be on the top of technological development and innovation. We are also active in an amendment process of European standards related to access covers.

ACO Access Covers are type tested and certified according to following standards

EN 1253-4
Gullies for buildings – Access covers

- ACO Access Covers UNIFACE
  Product certificate
  No. 204/C5a/2016/060-044177.

EN 124
Gully tops and manhole tops
for vehicular and pedestrian areas

- ACO Access Covers PAVING,
  ACO Access Covers SOLID
  Product certificate
  No. 204/C5a/2017/060-045479.
- ACO Access Covers Uniface DEEP 35
  ACO Access Covers Uniface DEEP 65
  Product certificate
  No.204/C5a/2020/060-050525

Certificates

ACO Access Cover UNIFACE SMART AL

- Lightweight cover with structural composite infill (no concrete necessary)
- Load capacity L15 with tiles in thickness up to 15 mm
- Extremely easy opening and manipulation
- No risk – load capacity always guaranteed

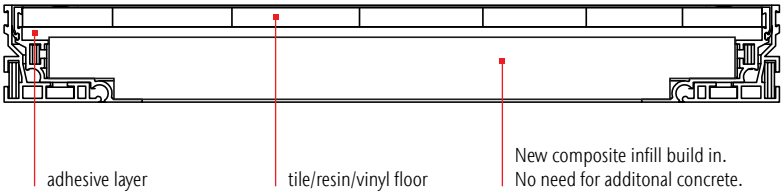

ACO Access Cover UNIFACE GS/SS

- Recessed access covers suitable for a thin floor surfaces in thickness up to 15 mm
- The cover must be filled-up with concrete of required quality in order to achieve declared load capacity
- Declared load capacity tested and guaranteed with space for tiles 15 mm
- Type tested and certified according to EN 1253-4 – Product certificate No. 204/C5a/2016/060-044177

Common solution of access cover

- No information or guarantee for cover with tiles
- Example for a recessed cover with a clear opening 600×600 mm, declared test load 125 kN - if the concrete layer is reduced about 15 mm then the real test load is reduced to 75 kN only!

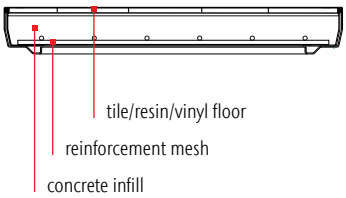

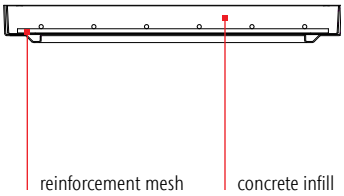

ACO Access Cover Uniface DEEP 35/65

- Recessed access covers are suitable for a thin floor in thickness up to 65mm
- The cover must be filled-up with concrete C35/45 in order to achieve declared load capacity
- Declared lead capacity up to B125 for clear opening up to 1m
- Tested and guaranteed with space for infill up to 65mm
- Certified and tested according to EN 124 - Product certificate No. 204/C5a/2020/060-050525

Common solution of access cover

- Example for a recessed cover with a clear opening 600×600 mm, declared test load 125 kN - if the concrete layer is reduced about 15 mm then the real test load is reduced to 75 kN only!

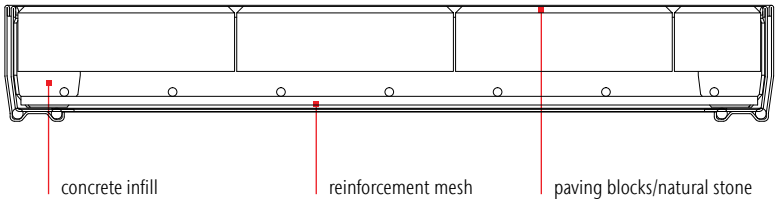

Certificates

ACO Industries k.s. in Přibyslav is using a quality management system certified according to EN ISO 9001. The company has been certified since 1996.

Factory production control, employees qualification and technical equipment are certified according to EN 1090: Execution of steel structures and aluminium structures - Part 1: Requirements for conformity assessment of structural components.

Customers can rely on key parameters of ACO Access Covers:

- Safety
- Declared load capacity
- Tightness
- Functionality

ACO Access Covers – Innovation you can trust

ACO Access Cover PAVING

- Strong optimized supports are welded underneath of the cover
- Space for paving blocks up to 110 mm
- Load capacity up to load class C250 for all clear openings up to 1 m
- No concrete or any other additional structural infill necessary
- Type tested and certified according to EN 124 – Product certificate No. 204/C5a/2017/060-045479

Common solution available on market

- Additional structural concrete infill necessary
- Less space for paving infill
- Longer installation time

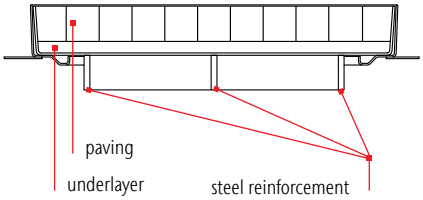

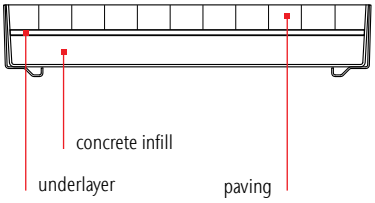

ACO. we care for water

Every ACO product supports the ACO WaterCycle

- ACO Access Covers UNIFACE
- ACO Access Covers PAVING
- ACO Access Covers SOLID
- ACO Access Covers FIRE RESISTANCE

ACO Industries k.s.

Havlickova 260
582 22 Pribyslav
Czech Republic

www.aco-accesscovers.com

All reasonable care has been taken in compiling the information in this document. All recommendations and suggestions on the use of ACO products are made without guarantee since the conditions of use are beyond the control of the Company. It is the customer's responsibility to ensure that each product is fit for its intended purpose and that the actual conditions of use are suitable. This brochure and any advice is provided free of charge and accordingly on terms that no liability (including liability for negligence) will attach the Company or its servants or agents arising out of or in connection with or in relation to this brochure or any such advice. Any goods supplied by the Company will be supplied solely upon its standard conditions of sale, copies of which are available on request. The Company's policy of continuous product development and improvement renders specifications liable to modification. information provided in this brochure is therefore subject to change without prior notification.

ACO Access Cover catalogue/En/Q4/2024/ Subject to technical changes without notice.